# Functional Enrichment Analysis of Regulatory Elements with GeneCodis 4

GeneCodis
Gene annotations co-ocurrence discovery
2007-2022

**Adrian Garcia-Moreno[1], Raul López-Dominguez[1,2], Juan A. Villatoro-García[1,2], Samuel Perez-Fernandez[1], Pedro Carmona-Saez[1,2]**

[1]BioInformatics Unit Centre for Genomics and Oncological Research (GENyO) and [2]Department of Biostatistics, Department of Statistics and O.R. UGR, Spain

## Background

**Enrichment Analyses (EA)**

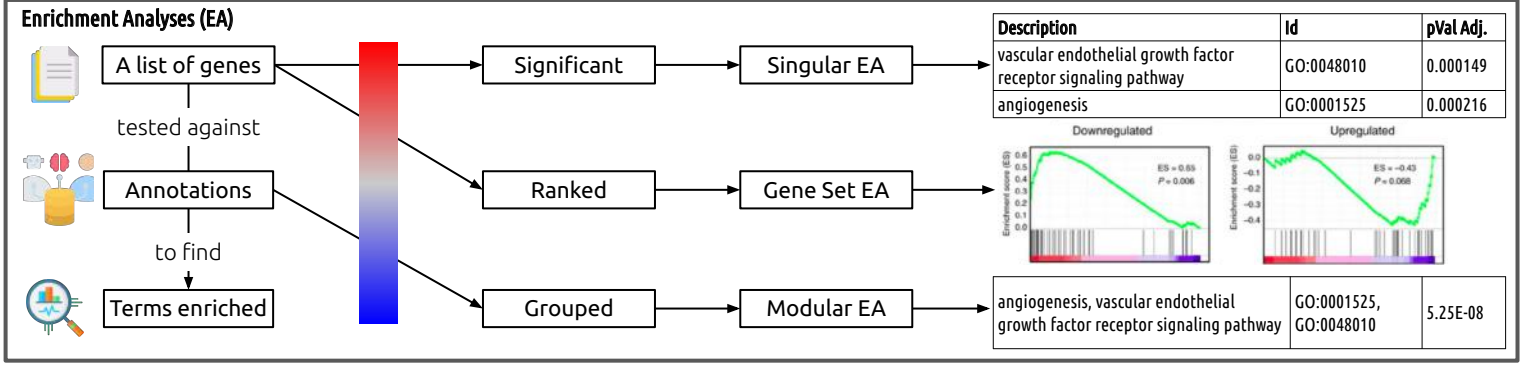


| Description | Id | pVal Adj. |
|---|---|---|
| vascular endothelial growth factor receptor signaling pathway | GO:0048010 | 0.000149 |
| angiogenesis | GO:0001525 | 0.000216 |
| angiogenesis, vascular endothelial growth factor receptor signaling pathway | GO:0001525, GO:0048010 | 5.25E-08 |

## Motivation

**The EA of regulatory elements is done via their targets genes but this implies a double issue.**

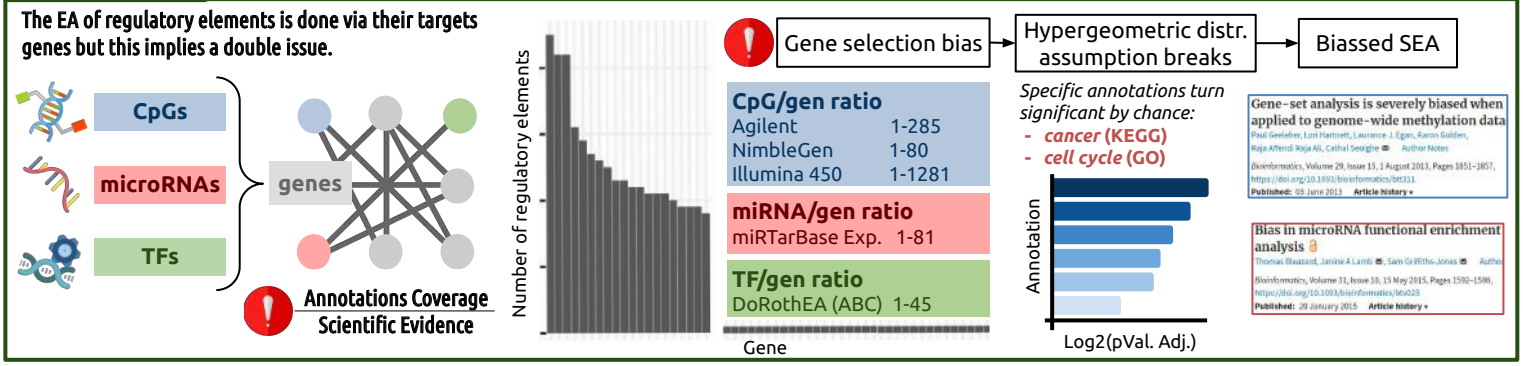


## Methods

**1. Wallenius noncentral hypergeometric distribution approach (Young *et al.* 2010: GOseq)**

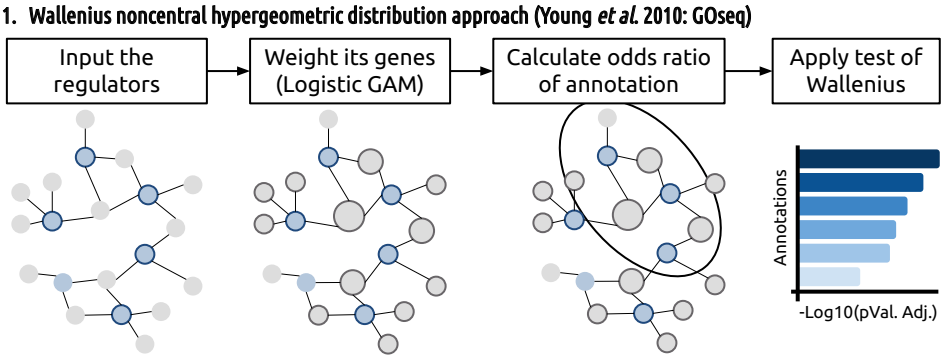


**2. Transformed annotation gene sets to miRNAs sets**

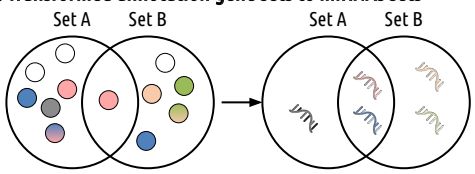


**3. Use miRNAs direct annotations**

- Human microRNA Disease Database (HMDD)
- Mammal ncRNA–Disease Repository (MNDR)
- Tool for miRNA set Analysis (TAM)

## GeneCodis4

***Includes the latest methods in regulatory elements SEA in a web tool enabling to integrate results from different omics and knowledge databases with its MEA***

**14 organisms**

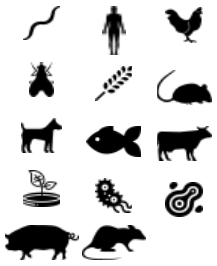

**21 collections, 4 categories**

**Functional**
- BioPlanet
- GO Biological Process
- GO Cellular Component
- GO Covid
- GO Molecular Function
- KEGG Pathways
- Mouse Genome Inf.
- Panther Pathways
- Reactome
- WikiPathways

**Regulatory**
- Transcription Factors
- miRNAs

**miRNAs-based**
- HMDD3
- MNDR
- TAM2

**Drugs**
- CTD
- LINCS
- PharmGKB

**Phenotypes**
- DisGeNET
- HPO
- OMIM

**2 MEA algorithms**
- Frequent Pattern Growth
- Frequent Pattern Maximal

**2 Statistics methods**
- Hypergeometric (Fisher's)
- Wallenius

**Its is an API !**

**Interactive visualizations**

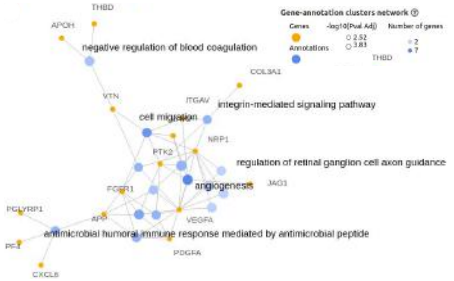


Genyo Bioinformatics Unit
Statistical Bioinformatics & Systems Biomedicine
UNIVERSIDAD DE GRANADA
iSCB

*This poster presentation has been partially funded by the International Society of Computational Biology (ISCB) and the University of Granada.*
*The authors declare that they have no conflicts of interest with the contents of this poster.*